Full wwPDB X-ray Structure Validation Report (i)

Jun 16, 2024 – 11:11 AM EDT

PDB ID	:	2V4B
Title	:	Crystal Structure of Human ADAMTS-1 catalytic Domain and Cysteine- Rich Domain (apo-form)
Authors	:	Gerhardt, S.; Hassall, G.; Hawtin, P.; McCall, E.; Flavell, L.; Minshull, C.; Hargreaves, D.; Ting, A.; Pauptit, R.A.; Parker, A.E.; Abbott, W.M.
Deposited on	:	2007-06-28
Resolution	:	2.00 Å(reported)

This is a Full wwPDB X-ray Structure Validation Report for a publicly released PDB entry.

We welcome your comments at *validation@mail.wwpdb.org*
A user guide is available at
https://www.wwpdb.org/validation/2017/XrayValidationReportHelp
with specific help available everywhere you see the (i) symbol.

The types of validation reports are described at
http://www.wwpdb.org/validation/2017/FAQs#types.

The following versions of software and data (see references (1)) were used in the production of this report:

MolProbity	:	4.02b-467
Xtriage (Phenix)	:	1.20.1
EDS	:	2.37.1
Percentile statistics	:	20191225.v01 (using entries in the PDB archive December 25th 2019)
Refmac	:	5.8.0158
CCP4	:	7.0.044 (Gargrove)
Ideal geometry (proteins)	:	Engh & Huber (2001)
Ideal geometry (DNA, RNA)	:	Parkinson et al. (1996)
Validation Pipeline (wwPDB-VP)	:	2.37.1

1 Overall quality at a glance (i)

The following experimental techniques were used to determine the structure:
X-RAY DIFFRACTION

The reported resolution of this entry is 2.00 Å.

Percentile scores (ranging between 0-100) for global validation metrics of the entry are shown in the following graphic. The table shows the number of entries on which the scores are based.

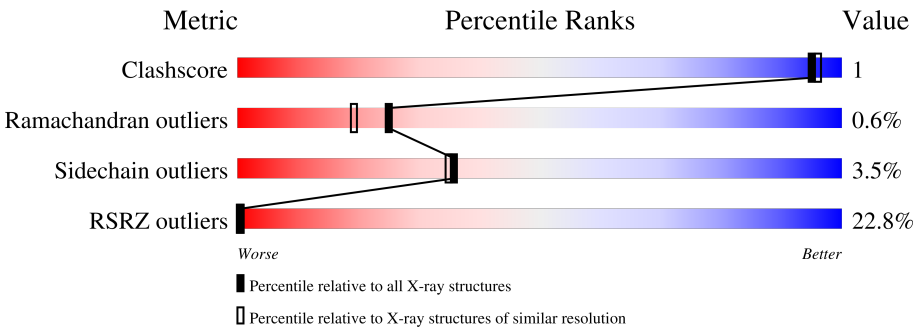

Metric	Whole archive (#Entries)	Similar resolution (#Entries, resolution range(Å))
Clashscore	141614	9178 (2.00-2.00)
Ramachandran outliers	138981	9054 (2.00-2.00)
Sidechain outliers	138945	9053 (2.00-2.00)
RSRZ outliers	127900	7900 (2.00-2.00)

The table below summarises the geometric issues observed across the polymeric chains and their fit to the electron density. The red, orange, yellow and green segments of the lower bar indicate the fraction of residues that contain outliers for >=3, 2, 1 and 0 types of geometric quality criteria respectively. A grey segment represents the fraction of residues that are not modelled. The numeric value for each fraction is indicated below the corresponding segment, with a dot representing fractions <=5% The upper red bar (where present) indicates the fraction of residues that have poor fit to the electron density. The numeric value is given above the bar.

Mol	Chain	Length	Quality of chain
1	A	300	20% 88% • 7%
1	B	300	23% 87% 6% 6%

2 Entry composition (i)

There are 7 unique types of molecules in this entry. The entry contains 4556 atoms, of which 0 are hydrogens and 0 are deuteriums.

In the tables below, the ZeroOcc column contains the number of atoms modelled with zero occupancy, the AltConf column contains the number of residues with at least one atom in alternate conformation and the Trace column contains the number of residues modelled with at most 2 atoms.

- Molecule 1 is a protein called ADAMTS-1.

Mol	Chain	Residues	Atoms					ZeroOcc	AltConf	Trace
			Total	C	N	O	S			
1	A	280	2151	1337	374	415	25	0	0	0
1	B	281	2164	1343	379	417	25	0	0	0

- Molecule 2 is ZINC ION (three-letter code: ZN) (formula: Zn).

Mol	Chain	Residues	Atoms		ZeroOcc	AltConf
			Total	Zn		
2	A	1	1	1	0	0
2	B	1	1	1	0	0

- Molecule 3 is CADMIUM ION (three-letter code: CD) (formula: Cd).

Mol	Chain	Residues	Atoms		ZeroOcc	AltConf
			Total	Cd		
3	A	2	2	2	0	0
3	B	2	2	2	0	0

- Molecule 4 is NICKEL (II) ION (three-letter code: NI) (formula: Ni).

Mol	Chain	Residues	Atoms		ZeroOcc	AltConf
			Total	Ni		
4	A	9	9	9	0	0
4	B	5	5	5	0	0

- Molecule 5 is MAGNESIUM ION (three-letter code: MG) (formula: Mg).

Mol	Chain	Residues	Atoms		ZeroOcc	AltConf
			Total	Mg		
5	A	2	2	2	0	0
			Total	Mg		
5	B	1	1	1	0	0

- Molecule 6 is SODIUM ION (three-letter code: NA) (formula: Na).

Mol	Chain	Residues	Atoms		ZeroOcc	AltConf
			Total	Na		
6	A	2	2	2	0	0
			Total	Na		
6	B	2	2	2	0	0

- Molecule 7 is water.

Mol	Chain	Residues	Atoms		ZeroOcc	AltConf
			Total	O		
7	A	133	133	133	0	0
			Total	O		
7	B	81	81	81	0	0

3 Residue-property plots (i)

These plots are drawn for all protein, RNA, DNA and oligosaccharide chains in the entry. The first graphic for a chain summarises the proportions of the various outlier classes displayed in the second graphic. The second graphic shows the sequence view annotated by issues in geometry and electron density. Residues are color-coded according to the number of geometric quality criteria for which they contain at least one outlier: green = 0, yellow = 1, orange = 2 and red = 3 or more. A red dot above a residue indicates a poor fit to the electron density (RSRZ > 2). Stretches of 2 or more consecutive residues without any outlier are shown as a green connector. Residues present in the sample, but not in the model, are shown in grey.

• Molecule 1: ADAMTS-1

Chain A:

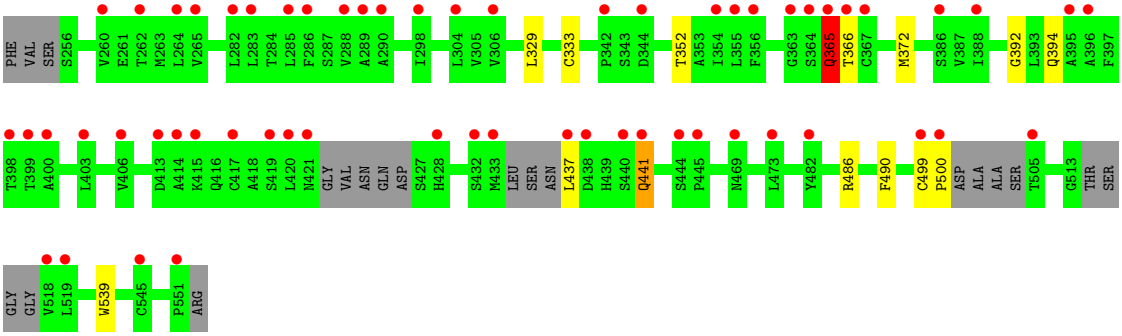

• Molecule 1: ADAMTS-1

Chain B:

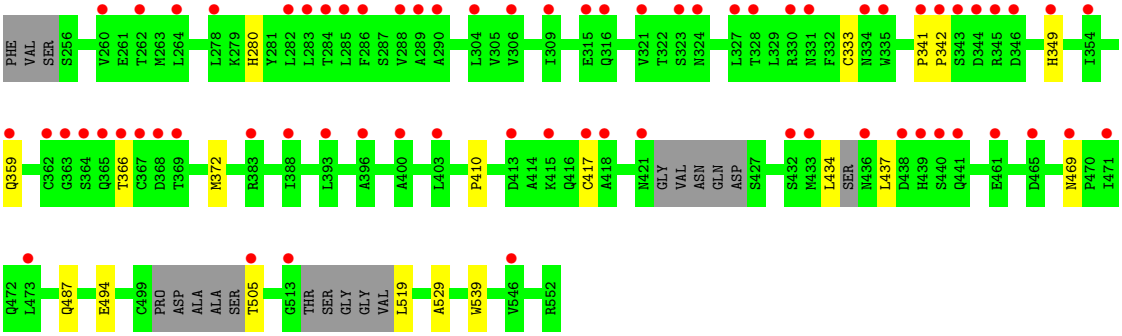

4 Data and refinement statistics (i)

Property	Value	Source
Space group	P 1 21 1	Depositor
Cell constants a, b, c, α, β, γ	51.58Å 64.40Å 113.52Å 90.00° 90.91° 90.00°	Depositor
Resolution (Å)	40.26 – 2.00 40.25 – 2.00	Depositor EDS
% Data completeness (in resolution range)	99.9 (40.26-2.00) 99.9 (40.25-2.00)	Depositor EDS
R_{merge}	0.11	Depositor
R_{sym}	(Not available)	Depositor
$< I/\sigma(I) >$ [1]	1.75 (at 2.00Å)	Xtriage
Refinement program	REFMAC 5.2.0005	Depositor
R, R_{free}	0.220 , 0.263 (Not available) , (Not available)	Depositor DCC
R_{free} test set	No test flags present.	wwPDB-VP
Wilson B-factor (Å^2)	27.5	Xtriage
Anisotropy	0.458	Xtriage
Bulk solvent k_{sol}(e/Å^3), B_{sol}(Å^2)	0.37 , 48.9	EDS
L-test for twinning[2]	$< \|L\| > = 0.46$, $< L^2 > = 0.29$	Xtriage
Estimated twinning fraction	0.053 for h,-k,-l	Xtriage
F_o,F_c correlation	0.92	EDS
Total number of atoms	4556	wwPDB-VP
Average B, all atoms (Å^2)	38.0	wwPDB-VP

Xtriage's analysis on translational NCS is as follows: *The largest off-origin peak in the Patterson function is 5.53% of the height of the origin peak. No significant pseudotranslation is detected.*

[1]Intensities estimated from amplitudes.

[2]Theoretical values of $< |L| >$, $< L^2 >$ for acentric reflections are 0.5, 0.333 respectively for untwinned datasets, and 0.375, 0.2 for perfectly twinned datasets.

5 Model quality (i)

5.1 Standard geometry (i)

Bond lengths and bond angles in the following residue types are not validated in this section: ZN, NI, CD, MG, NA

The Z score for a bond length (or angle) is the number of standard deviations the observed value is removed from the expected value. A bond length (or angle) with $|Z| > 5$ is considered an outlier worth inspection. RMSZ is the root-mean-square of all Z scores of the bond lengths (or angles).

Mol	Chain	Bond lengths		Bond angles	
		RMSZ	$\#\|Z\|>5$	RMSZ	$\#\|Z\|>5$
1	A	0.50	0/2202	0.59	0/2988
1	B	0.49	0/2214	0.59	0/3002
All	All	0.50	0/4416	0.59	0/5990

There are no bond length outliers.

There are no bond angle outliers.

There are no chirality outliers.

There are no planarity outliers.

5.2 Too-close contacts (i)

In the following table, the Non-H and H(model) columns list the number of non-hydrogen atoms and hydrogen atoms in the chain respectively. The H(added) column lists the number of hydrogen atoms added and optimized by MolProbity. The Clashes column lists the number of clashes within the asymmetric unit, whereas Symm-Clashes lists symmetry-related clashes.

Mol	Chain	Non-H	H(model)	H(added)	Clashes	Symm-Clashes
1	A	2151	0	2021	6	0
1	B	2164	0	2035	4	0
2	A	1	0	0	0	0
2	B	1	0	0	0	0
3	A	2	0	0	0	0
3	B	2	0	0	0	0
4	A	9	0	0	0	0
4	B	5	0	0	0	0
5	A	2	0	0	0	0
5	B	1	0	0	0	0
6	A	2	0	0	0	0

Continued on next page...

Continued from previous page...

Mol	Chain	Non-H	H(model)	H(added)	Clashes	Symm-Clashes
6	B	2	0	0	0	0
7	A	133	0	0	0	0
7	B	81	0	0	0	0
All	All	4556	0	4056	9	0

The all-atom clashscore is defined as the number of clashes found per 1000 atoms (including hydrogen atoms). The all-atom clashscore for this structure is 1.

All (9) close contacts within the same asymmetric unit are listed below, sorted by their clash magnitude.

Atom-1	Atom-2	Interatomic distance (Å)	Clash overlap (Å)
1:A:499:CYS:HA	1:A:500:PRO:C	2.02	0.80
1:B:487:GLN:HE22	1:B:529:ALA:H	1.45	0.64
1:B:341:PRO:O	1:B:349:HIS:HD2	1.91	0.54
1:A:441:GLN:HE21	1:A:441:GLN:HA	1.74	0.52
1:A:365:GLN:HG2	1:A:366:THR:H	1.78	0.47
1:A:392:GLY:HA2	1:A:490:PHE:HB3	1.97	0.47
1:A:329:LEU:HD22	1:A:372:MET:HG3	1.98	0.44
1:A:486:ARG:HD3	1:B:280:HIS:HB2	2.02	0.41
1:B:410:PRO:HG2	1:B:417:CYS:SG	2.60	0.41

There are no symmetry-related clashes.

5.3 Torsion angles (i)

5.3.1 Protein backbone (i)

In the following table, the Percentiles column shows the percent Ramachandran outliers of the chain as a percentile score with respect to all X-ray entries followed by that with respect to entries of similar resolution.

The Analysed column shows the number of residues for which the backbone conformation was analysed, and the total number of residues.

Mol	Chain	Analysed	Favoured	Allowed	Outliers	Percentiles	
1	A	270/300 (90%)	267 (99%)	2 (1%)	1 (0%)	34	30
1	B	271/300 (90%)	264 (97%)	5 (2%)	2 (1%)	22	16
All	All	541/600 (90%)	531 (98%)	7 (1%)	3 (1%)	25	19

All (3) Ramachandran outliers are listed below:

Mol	Chain	Res	Type
1	B	366	THR
1	A	365	GLN
1	B	342	PRO

5.3.2 Protein sidechains (i)

In the following table, the Percentiles column shows the percent sidechain outliers of the chain as a percentile score with respect to all X-ray entries followed by that with respect to entries of similar resolution.

The Analysed column shows the number of residues for which the sidechain conformation was analysed, and the total number of residues.

Mol	Chain	Analysed	Rotameric	Outliers	Percentiles	
1	A	243/259 (94%)	236 (97%)	7 (3%)	42	43
1	B	244/259 (94%)	234 (96%)	10 (4%)	30	28
All	All	487/518 (94%)	470 (96%)	17 (4%)	36	35

All (17) residues with a non-rotameric sidechain are listed below:

Mol	Chain	Res	Type
1	A	333	CYS
1	A	352	THR
1	A	365	GLN
1	A	394	GLN
1	A	437	LEU
1	A	441	GLN
1	A	539	TRP
1	B	333	CYS
1	B	359	GLN
1	B	372	MET
1	B	434	LEU
1	B	437	LEU
1	B	469	ASN
1	B	494	GLU
1	B	505	THR
1	B	519	LEU
1	B	539	TRP

Sometimes sidechains can be flipped to improve hydrogen bonding and reduce clashes. All (7) such sidechains are listed below:

Mol	Chain	Res	Type
1	A	441	GLN
1	A	457	ASN
1	B	349	HIS
1	B	365	GLN
1	B	408	ASN
1	B	441	GLN
1	B	487	GLN

5.3.3 RNA (i)

There are no RNA molecules in this entry.

5.4 Non-standard residues in protein, DNA, RNA chains (i)

There are no non-standard protein/DNA/RNA residues in this entry.

5.5 Carbohydrates (i)

There are no monosaccharides in this entry.

5.6 Ligand geometry (i)

Of 27 ligands modelled in this entry, 27 are monoatomic - leaving 0 for Mogul analysis.

There are no bond length outliers.

There are no bond angle outliers.

There are no chirality outliers.

There are no torsion outliers.

There are no ring outliers.

No monomer is involved in short contacts.

5.7 Other polymers (i)

There are no such residues in this entry.

5.8 Polymer linkage issues (i)

There are no chain breaks in this entry.

6 Fit of model and data (i)

6.1 Protein, DNA and RNA chains (i)

In the following table, the column labelled '#RSRZ> 2' contains the number (and percentage) of RSRZ outliers, followed by percent RSRZ outliers for the chain as percentile scores relative to all X-ray entries and entries of similar resolution. The OWAB column contains the minimum, median, 95th percentile and maximum values of the occupancy-weighted average B-factor per residue. The column labelled 'Q< 0.9' lists the number of (and percentage) of residues with an average occupancy less than 0.9.

Mol	Chain	Analysed	<RSRZ>	#RSRZ>2			OWAB(Å^2)	Q<0.9
1	A	280/300 (93%)	1.26	59 (21%)	1	0	23, 35, 48, 57	0
1	B	281/300 (93%)	1.48	69 (24%)	0	0	26, 39, 56, 62	0
All	All	561/600 (93%)	1.37	128 (22%)	0	0	23, 37, 53, 62	0

All (128) RSRZ outliers are listed below:

Mol	Chain	Res	Type	RSRZ
1	B	364	SER	9.0
1	B	367	CYS	9.0
1	B	365	GLN	6.7
1	B	366	THR	6.1
1	B	363	GLY	6.0
1	A	419	SER	5.5
1	B	369	THR	5.4
1	A	551	PRO	5.0
1	A	433	MET	4.5
1	A	500	PRO	4.4
1	B	316	GLN	4.4
1	A	344	ASP	4.2
1	A	285	LEU	4.1
1	B	323	SER	4.0
1	A	518	VAL	4.0
1	B	345	ARG	3.9
1	A	421	ASN	3.9
1	B	285	LEU	3.8
1	A	264	LEU	3.8
1	B	342	PRO	3.8
1	A	364	SER	3.8
1	B	439	HIS	3.8
1	B	433	MET	3.7
1	A	417	CYS	3.7

Continued on next page...

Continued from previous page...

Mol	Chain	Res	Type	RSRZ
1	B	354	ILE	3.7
1	B	330	ARG	3.7
1	A	432	SER	3.6
1	B	362	CYS	3.6
1	A	365	GLN	3.6
1	A	304	LEU	3.6
1	A	505	THR	3.6
1	A	354	ILE	3.5
1	B	288	VAL	3.5
1	B	505	THR	3.4
1	A	388	ILE	3.4
1	A	413	ASP	3.4
1	A	440	SER	3.3
1	B	346	ASP	3.3
1	A	366	THR	3.3
1	B	441	GLN	3.3
1	B	440	SER	3.3
1	A	414	ALA	3.3
1	B	413	ASP	3.2
1	A	403	LEU	3.2
1	B	546	VAL	3.2
1	B	461	GLU	3.2
1	A	363	GLY	3.2
1	B	473	LEU	3.1
1	B	289	ALA	3.1
1	B	513	GLY	3.1
1	A	283	LEU	3.0
1	A	367	CYS	3.0
1	A	473	LEU	3.0
1	A	445	PRO	3.0
1	B	304	LEU	3.0
1	B	436	ASN	3.0
1	A	282	LEU	2.9
1	B	264	LEU	2.9
1	A	265	VAL	2.9
1	A	289	ALA	2.9
1	A	545	CYS	2.9
1	B	341	PRO	2.9
1	A	444	SER	2.8
1	B	343	SER	2.8
1	B	396	ALA	2.8
1	A	482	TYR	2.8

Continued on next page...

Continued from previous page...

Mol	Chain	Res	Type	RSRZ
1	B	286	PHE	2.8
1	B	278	LEU	2.8
1	A	288	VAL	2.7
1	A	260	VAL	2.7
1	B	328	THR	2.7
1	B	471	ILE	2.7
1	B	432	SER	2.7
1	A	415	LYS	2.7
1	B	309	ILE	2.7
1	A	519	LEU	2.7
1	B	324	ASN	2.6
1	A	306	VAL	2.6
1	A	356	PHE	2.6
1	B	469	ASN	2.6
1	B	335	TRP	2.5
1	A	469	ASN	2.5
1	B	418	ALA	2.5
1	B	306	VAL	2.5
1	A	298	ILE	2.5
1	B	334	ASN	2.5
1	B	315	GLU	2.5
1	A	286	PHE	2.5
1	A	355	LEU	2.4
1	B	368	ASP	2.4
1	B	388	ILE	2.4
1	A	290	ALA	2.4
1	B	327	LEU	2.4
1	A	499	CYS	2.4
1	B	283	LEU	2.4
1	A	396	ALA	2.4
1	A	420	LEU	2.3
1	A	399	THR	2.3
1	A	428	HIS	2.3
1	B	282	LEU	2.3
1	B	403	LEU	2.3
1	B	284	THR	2.3
1	A	441	GLN	2.3
1	A	438	ASP	2.3
1	B	400	ALA	2.2
1	B	321	VAL	2.2
1	B	262	THR	2.2
1	B	438	ASP	2.2

Continued on next page...

Continued from previous page...

Mol	Chain	Res	Type	RSRZ
1	B	465	ASP	2.2
1	A	395	ALA	2.2
1	B	417	CYS	2.2
1	A	437	LEU	2.2
1	B	331	ASN	2.1
1	A	342	PRO	2.1
1	B	349	HIS	2.1
1	B	359	GLN	2.1
1	B	260	VAL	2.1
1	B	415	LYS	2.1
1	B	393	LEU	2.1
1	B	383	ARG	2.1
1	A	400	ALA	2.1
1	A	386	SER	2.0
1	A	398	THR	2.0
1	A	406	VAL	2.0
1	B	344	ASP	2.0
1	B	421	ASN	2.0
1	A	262	THR	2.0
1	B	290	ALA	2.0

6.2 Non-standard residues in protein, DNA, RNA chains (i)

There are no non-standard protein/DNA/RNA residues in this entry.

6.3 Carbohydrates (i)

There are no monosaccharides in this entry.

6.4 Ligands (i)

In the following table, the Atoms column lists the number of modelled atoms in the group and the number defined in the chemical component dictionary. The B-factors column lists the minimum, median, 95th percentile and maximum values of B factors of atoms in the group. The column labelled 'Q< 0.9' lists the number of atoms with occupancy less than 0.9.

Mol	Type	Chain	Res	Atoms	RSCC	RSR	B-factors(Å^2)	Q<0.9
5	MG	B	1558	1/1	0.78	0.14	51,51,51,51	0
6	NA	A	1567	1/1	0.88	0.12	40,40,40,40	0
5	MG	A	1565	1/1	0.91	0.10	52,52,52,52	0

Continued on next page...

Continued from previous page...

Mol	Type	Chain	Res	Atoms	RSCC	RSR	B-factors(Å^2)	Q<0.9
6	NA	B	1563	1/1	0.92	0.09	45,45,45,45	0
4	NI	A	1561	1/1	0.94	0.06	34,34,34,34	0
6	NA	B	1562	1/1	0.95	0.12	45,45,45,45	0
5	MG	A	1560	1/1	0.95	0.12	39,39,39,39	0
4	NI	B	1561	1/1	0.96	0.07	44,44,44,44	0
4	NI	B	1560	1/1	0.97	0.10	64,64,64,64	0
4	NI	B	1559	1/1	0.97	0.05	30,30,30,30	0
3	CD	B	1554	1/1	0.98	0.07	43,43,43,43	0
3	CD	B	1556	1/1	0.98	0.08	41,41,41,41	0
4	NI	A	1559	1/1	0.98	0.05	59,59,59,59	0
2	ZN	B	1553	1/1	0.98	0.05	26,26,26,26	0
4	NI	A	1563	1/1	0.98	0.08	48,48,48,48	0
6	NA	A	1566	1/1	0.98	0.09	29,29,29,29	0
4	NI	A	1564	1/1	0.98	0.16	68,68,68,68	0
4	NI	B	1557	1/1	0.98	0.04	29,29,29,29	0
3	CD	A	1554	1/1	0.98	0.03	35,35,35,35	0
2	ZN	A	1552	1/1	0.99	0.12	25,25,25,25	0
4	NI	A	1562	1/1	0.99	0.03	53,53,53,53	0
4	NI	A	1555	1/1	0.99	0.05	40,40,40,40	0
4	NI	A	1556	1/1	0.99	0.17	26,26,26,26	0
4	NI	B	1555	1/1	0.99	0.04	49,49,49,49	0
4	NI	A	1557	1/1	0.99	0.07	28,28,28,28	0
4	NI	A	1558	1/1	0.99	0.10	37,37,37,37	0
3	CD	A	1553	1/1	0.99	0.03	38,38,38,38	0

6.5 Other polymers (i)

There are no such residues in this entry.